THIS DRAWING IS INDICATIVE ONLY (NOT FOR CONSTRUCTION)

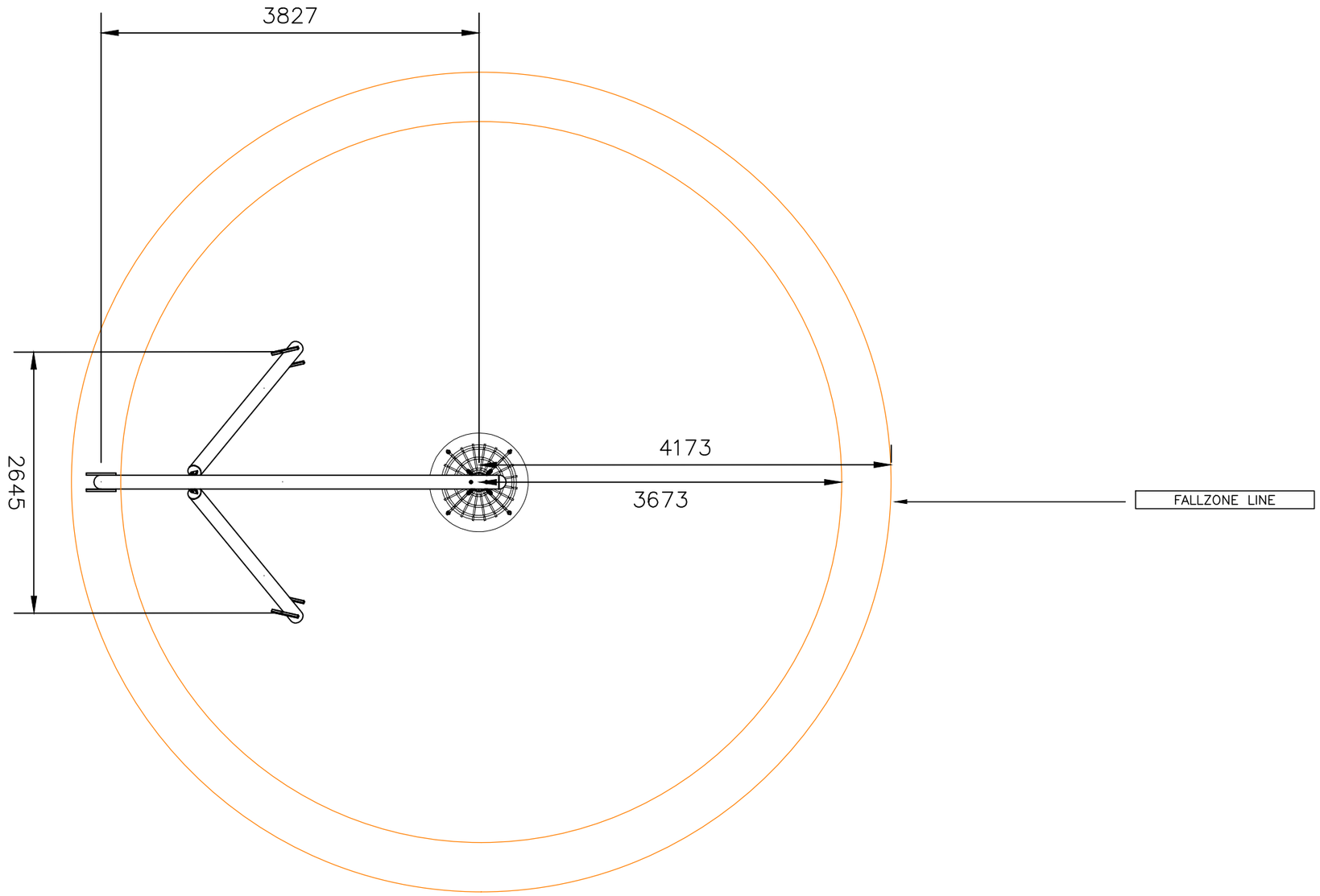

CANTILEVER BASKET SWING

DRAWING NO:	REV: A
DATE: 23/11/2023	
DRN: M. PLANT	PAGE SIZE: A3

EQUIPMENT LIST

OMNITECH

1. CANTILEVER BASKET SWING

SWING COLOURS:

POSTS – CHARCOAL
POST CAPS – HUNTER BLUE
CROSS BAR – HUNTER BLUE

QUANTITIES	QTY TOTAL

NOTES:

- Heights above Playground surface are shown on decks and all play equipment. ie. ⊕= 400mm
- Impact absorbing ground cover is required under and around all play equipment.
- The min. recommended fall zone around the entire play structure is shown. This zone is to be free of all tripping or collision hazards (ie. roots, rocks, border material, etc).
- Site layout and dimensions are subject to verification prior to installation.
- Dimensions in millimetres unless stated otherwise.

SCALE 1:50 (mm)

0 500 1000 1500 2000