MULTIPLAY GROUP / **BIGGIES SERIES**
MGBS 105-P

CMR PLAY

Product Information

Dimensions (L x W x H)	: **15,60 x 12,60 x 9,0 m**
Age Group	: **3+**
Capacity	: **112**
Fall Height	: **2,50 m**
Safety Area	: **134 m²**

MULTIPLAY GROUP / **BIGGIES SERIES**

Abstract themed transparent panels, pillars, platforms is a modular playground series with multiple play stations. The station of the games are designed in a fiction with successive persistence. While increasing spatial awareness with graphics on transparent panels, one of the main components of the product group, it contributes to the development of mental perception with abstract concepts. In this high towered product, the transparent panels placed at regular intervals help the children stay connected with the outside, while this transparency encourages the child to go up high with the sense of security.

DISTRIBUTED BY

AUSTEK Play
We're Serious about fun!

1300 433 364

TÜVRheinland TSE

"dreams come true" Cemer

MULTIPLAY GROUP / **BIGGIES SERIES**
MGBS 105-P

Metal parts are comprised of ST 37 Steel with a 3-step metal finish. Sandblasting and solvent-free zinc primer coating and electrostatic powder paint application is inherently corrosion resistant under extreme weather conditions and UV.

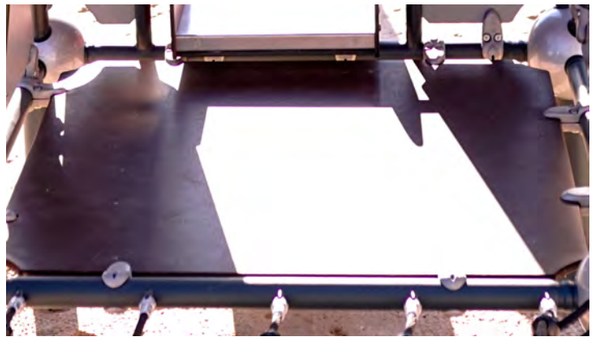

Durable and weatherproof laminated Plywood is used at platforms. These platforms have ability of anti-slip feature to increase the safety of the users.

Sliding surface of the equipment is made of UV resistant High Density Polyethylene Sheet which is an alternative to stainless steel slides in sunny environments. Sides of the slide is HPL or HDPE with rounded edges.

CmrRope ™ is formed by 6 strands of galvanized wires and a core either steel or fiber. Each strand is tightly braided with Polyester which is adhered to galvanized wires with a patented method to create a solid surface where polyester meets with wires. So extra protection is achieved against friction and vandalism. Surface is extremely abrasion and UV resistant also fire retardant.

High quality panels made of HPL panels are milled to provide a smooth, gently rounded edge. The thickness of the panels varies according to its purpose for floors, roofs, and walls. These panels are connected to steel pipes or profiles with cast aluminum panel clamps or flanges.

Polycarbonate materials are transparent plastic materials with high light transmittance close to glass, high resistance to heat, chemicals, scratching and impact. The allowable temperature range is from -100 °C to + 135 °C, and it helps to offer sustainable products to users with its light transmittance of up to 90% and its water-repellent feature on the surface.

MULTIPLAY GROUP / **BIGGIES SERIES**
MGBS 105-P

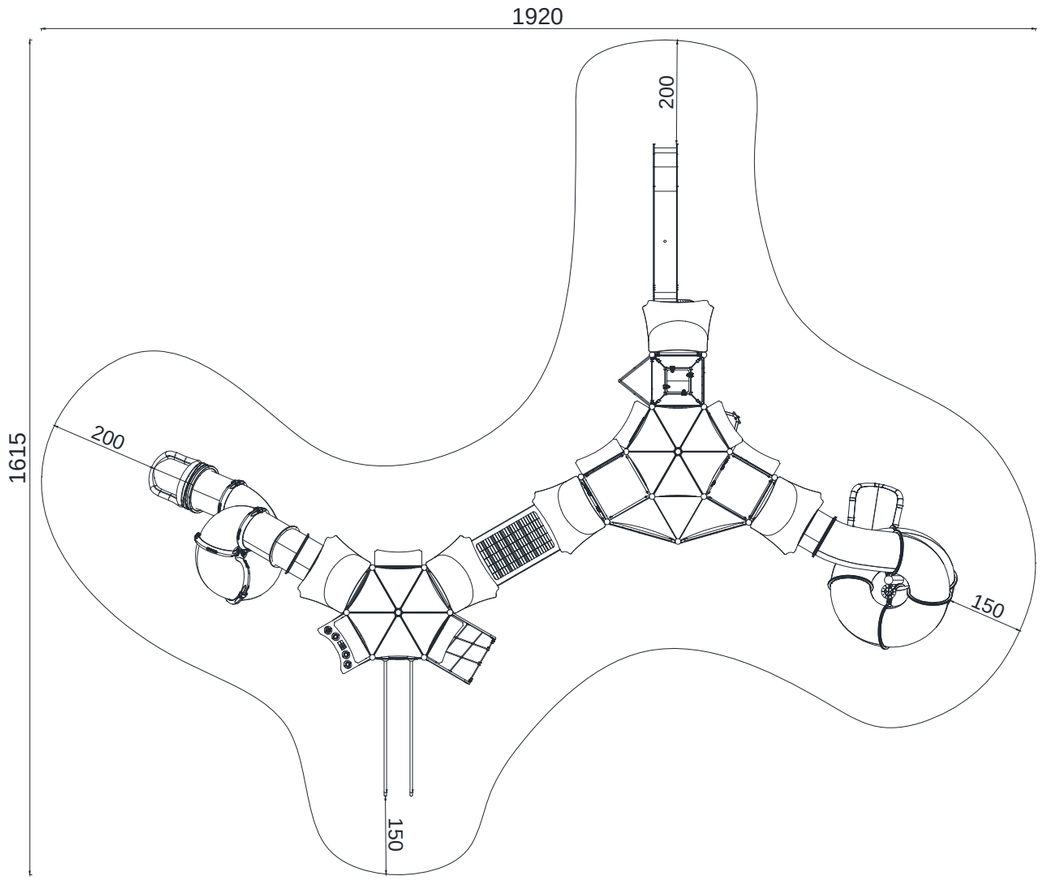

TOP VIEW

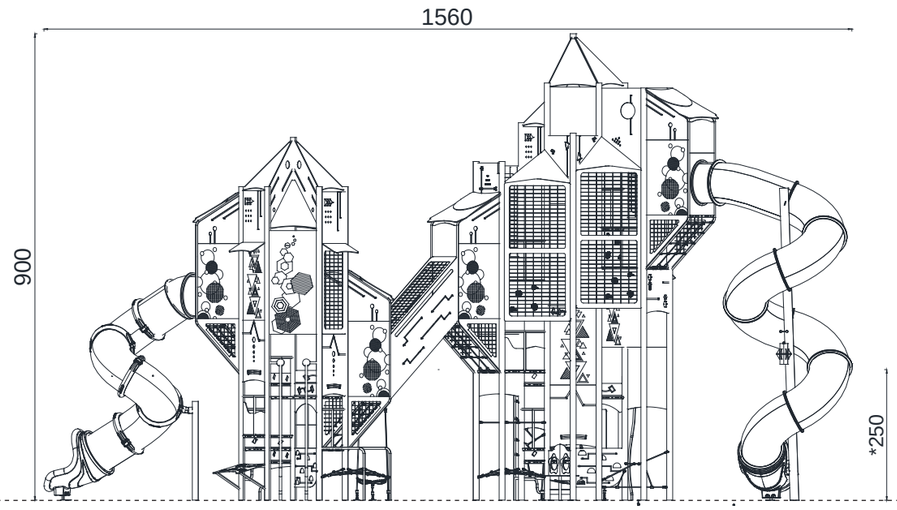

FRONT VIEW

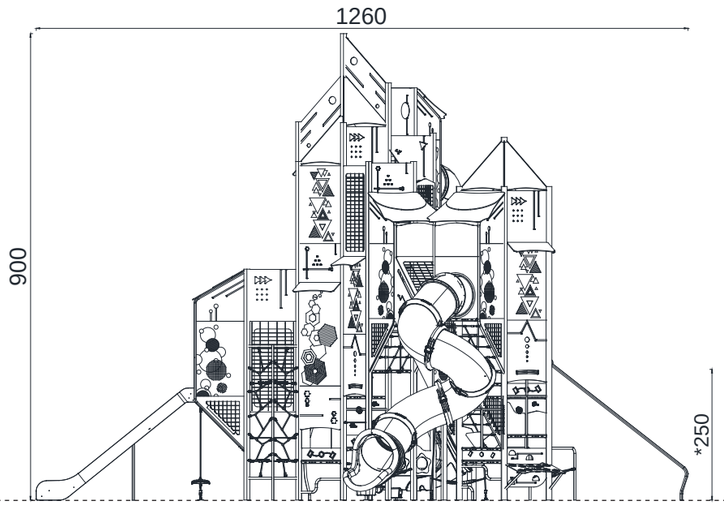

SIDE VIEW

Maximum Fall Height / Dimensions shown are in cm

MULTIPLAY GROUP / **BIGGIES SERIES**
MGBS 105-P

BOUNCING
To bounce is the act of bouncing on a responsive, flexible, elastic or tensile surface.

SLIDE
To slide is the act of moving fast downwards stead on a slide.

BALANCE
To balance is to stay upright when walking or standing on a surface that makes this challenging.

ROCK
To rock is the action of rocking back and forth, or sideways, on e.g. a piece of spring equipment.

SITTING
It is an area where children can rest while sitting and have fun.

SWING
To swing is the movement of swinging back forth, of in circular movement, seated, standing or lying, in a unhindered arc.

HANGING
To hang in arms is the act of carrying the body with the hands or arms, possible to traverse to another platform or play item.

SPIN
To spin involves a fast, repeating horizontal or vertical turn of the body on a piece of equipment that facilitates social interaction.

CLIMBING
To climb is the act of moving upwards, cross coordinating arms and legs, on a vertical or inclined surface or net.

CRAWLING
To crawl is the movement of moving forwards or backwards, cross - coordinating arms and legs, on a horizontal or slightly incline surface

RUNNING
Running is an activity that encourages children to interact with the playgroup by running and develop physically.

ACCESSIBLE
These are special areas where children with disabilities can play and have fun and without feeling different.

INTERACTION
It is children's communicating with the play group by touching and feeling.

ROTATE
To rotate involves a vertical or horizontal slower paced turn of the body, facilitated by a piece of equipment.

EQUALITY
Equality is the feature of the playgroup to attract the attention of all children, regardless of gender.

SOCIALIZE
To socialize is the act of meeting, communicating or cooperating in an activity that stimulates and facilitates social interaction.

ROLE PLAY
Role play is motivated through play items that stage a frame, place or environment for acting out make believe or role play scenarios.

PULL
To pull is the act of pulling item towards you or you towards an item with one or both hands, or possibly with the entire body.

GLIDE
To glide is the act of moving from one point to another without shifting the feet, in a horizontal or vertical movement in a seated, lying or standing position, letting gravity do the work.

PUSH
To push is the act of pushing an item away from you with one or both hands, possibly with the entire body.

PREPARED BY: ERCAN BOZTEPE