DSW 4501/4551 Wall technical information

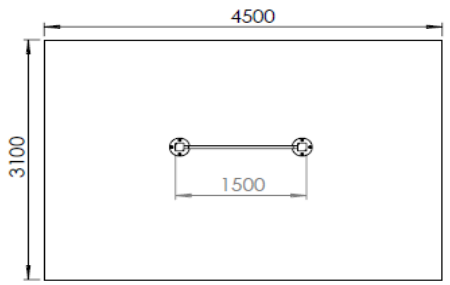

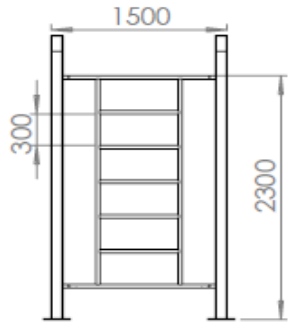

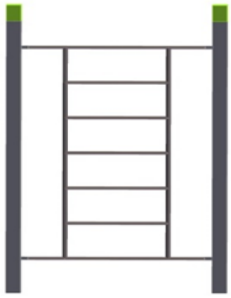

Cap = standard Top = surcharge

	Posts	Bars	Caps	Tops = option
Material	steel, hot dipped galvanized and texture powder coated in Gris 2400 Sablé	steel, hot dipped galvanized	Stainless steel, uncoated or coated in textured powdercoating in lime green (other colours are possible)	steel, hot zinc flame sprayed and texture powder coated in Lime Green (other RAL colours are possible)
Dimensions	Bars: Ø 33,7 x 3,25 mm	Posts: 100 x 100 x 3 mm		
Area of movement	14 m2			
free height of fall	1300 mm			
Fall protection according EN16630	No			
intended for	youth and adults >1400 mm			
max. user weight	120 kg			

Anchoring

750 mm in the ground with Ø 230 and Ø 115 mm frames
The installation frames need to be secured with fast-setting concrete. Every hole should be 500x500x750mm and around 0,12m3 concrete is needed. The soil should be packed tightly. Follow the instructions in the installation manual.

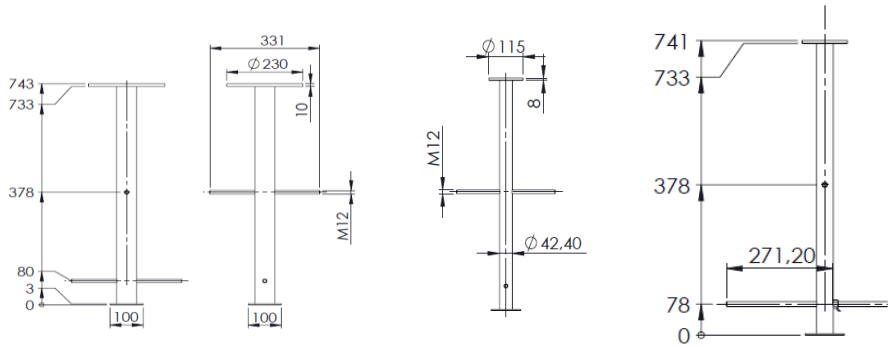

On concrete: with Ø 230 or 115 mm ground plate
Chemical anchoring needs to be used; this is not included.
Follow the instructions in the installation manual.

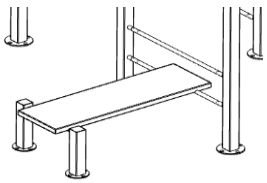

Notice:
Not intended for children < 1400 mm
The Denfit StreetWorkout equipment should not be used if you are suffering from physiological problems.
Avoid exaggerated physical exhaustion. In case of doubt please contact your doctor before use.
Inspect the equipment before use. Don't use it if it appears damaged or inoperable.

Certification: **EN16630:2015 - for permanantly installed outdoor fitness equipment**